NOTE: DIMENSIONS LOCATED IN BOXES ARE COMMON
SETBACK DIMENSIONS FOR EACH FITTING

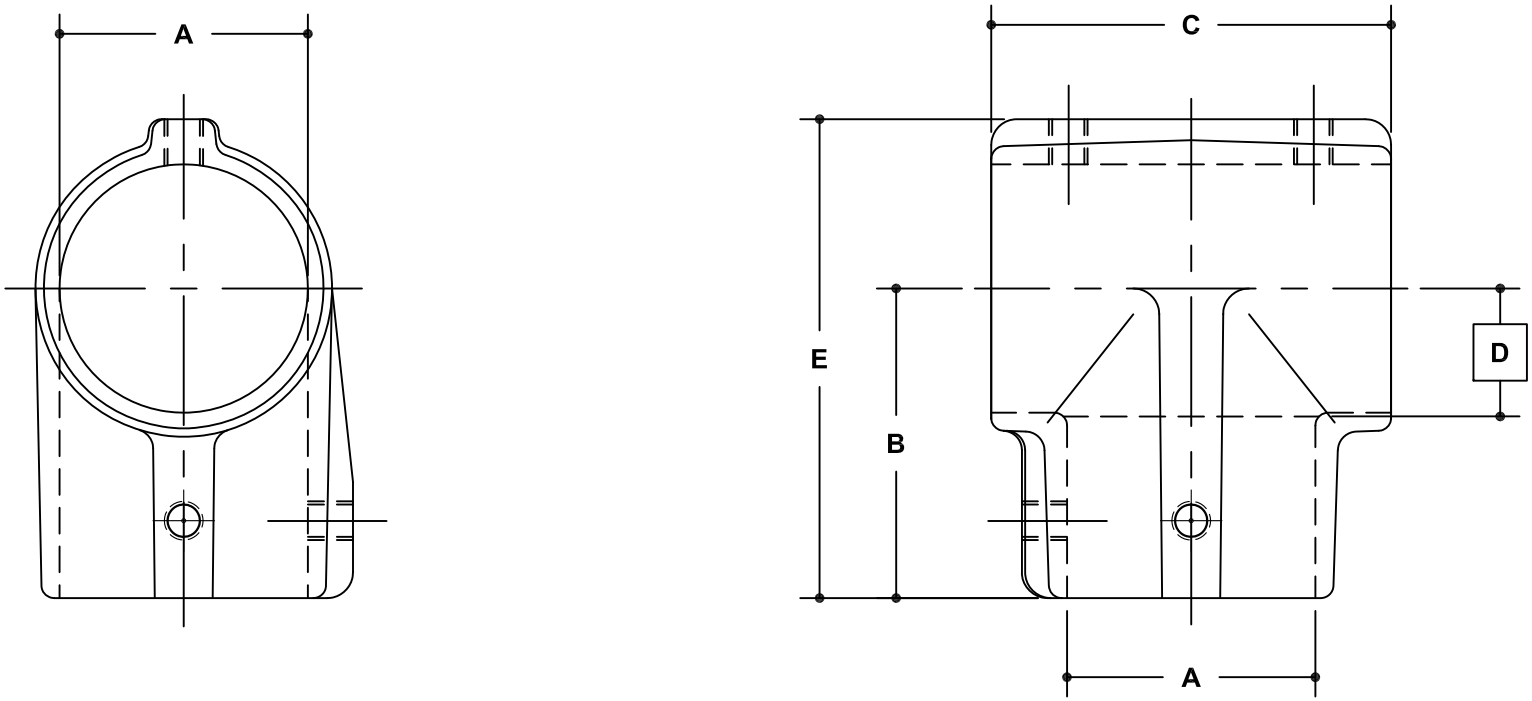

#5X Tee

SCALE: HALF

ENGLISH UNITS (Inches)							
PIPE SIZE	**A**	**B**	**C**	**D**	**E**	**F**	**G**
2"	2.40	3.00	3.88	1.25	4.64		

METRIC UNITS (mm)							
PIPE SIZE	**A**	**B**	**C**	**D**	**E**	**F**	**G**
2"	61	76	99	32	118		