NOTE: DIMENSIONS LOCATED IN BOXES ARE COMMON
SETBACK DIMENSIONS FOR EACH FITTING

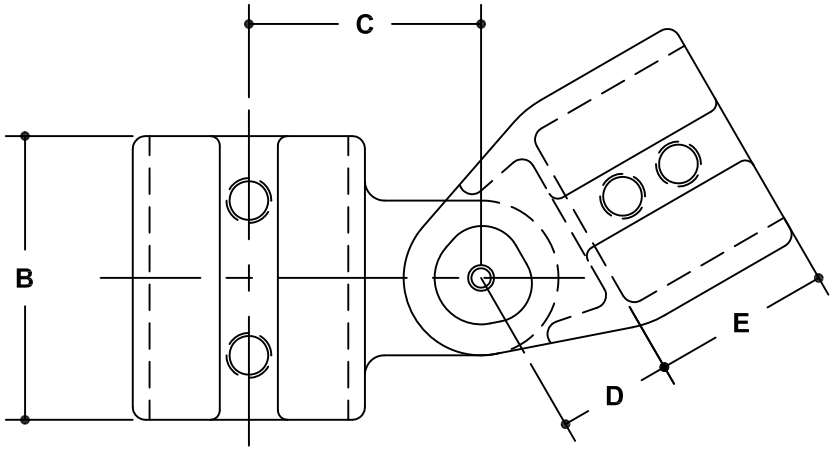

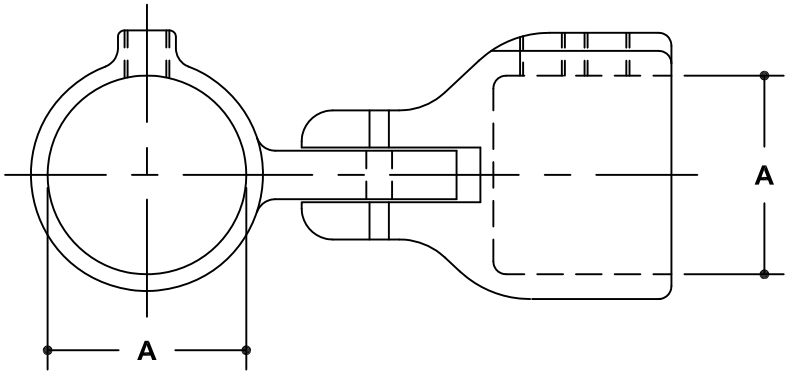

#17X Adjustable Elbow or Tee Assembly

SCALE: HALF

ENGLISH UNITS (Inches)							
PIPE SIZE	**A**	**B**	**C**	**D**	**E**	**F**	**G**
2"	2.41	3.88	2.63	1.13	2.13		

METRIC UNITS (mm)							
PIPE SIZE	**A**	**B**	**C**	**D**	**E**	**F**	**G**
2"	61	98	67	29	54		